Direct-acting 2/2 or 3/2-way pivoted armature valve

- Direct-acting, media-separated valve up to DN 5
- Maintenance-free pivoted armature technology
- Vibration-proof, block screwed solenoid system
- Service-friendly, robust manual override
- Explosion-proof variants

Product variants described in the data sheet may differ from the product presentation and description.

Can be combined with

Type 1087 ▸
Timer,
form A according to
DIN EN 175301-803

Type 2518 ▸
Cable plug,
form A according to
DIN EN 175301-803

Type 2509 ▸
Cable plug,
form A according to
DIN EN 175301-803

Type description

The 0330 valve is a direct-acting, media-separated pivoted armature valve. It is available as a 2/2 and 3/2-way variant. As a 3/2-way variant, it can be used as a distributor or mixing valve. Various diaphragm materials and circuit functions are available depending on the actual application. Brass, stainless steel, PEEK and polypropylene bodies are offered. The solenoid coils are moulded with a chemically resistant epoxy. Since the coil system is separated from the medium by a diaphragm, the valve is especially suitable for critical media such as aggressive acids and lyes. The 0330 is equipped with manual override for start-up and testing. To reduce energy demands, all the coils can be delivered with electronic power reduction or as an impulse variant. The switching status can be indicated via position feedback as a binary or NAMUR signal.

DTS 1000079488 EN Version: AC Status: RL (released | freigegeben | validé) printed: 28.03.2024

© Christian Bürkert GmbH & Co. KG, Subject to alteration

Visit product website ▸

Table of contents

1. General technical data 4

2. Circuit functions 5

3. Approvals and conformities 6

3.1. General notes ... 6
3.2. Conformity ... 6
3.3. Standards ... 6
3.4. Explosion protection ... 6
3.5. North America (USA/Canada) ... 7
3.6. Drinking water ... 7
3.7. Others ... 7
DNV GL classification ... 7

4. Materials 8

4.1. Bürkert resistApp ... 8
4.2. Material specifications ... 8

5. Dimensions 9

5.1. Standard version ... 9
Metal body ... 9
Plastic body ... 10
Cable version ... 11
5.2. Explosion-proof version ... 12
Terminal box version ... 12
Cable version ... 13

6. Device/Process connections 14

6.1. Pin assignment standard version ... 14
6.2. Pin assignment explosion-proof version ... 14

7. Performance specifications 15

7.1. Pressure range and flow rate ... 15
Standard version ... 15
Explosion-proof version ... 16
Use in other circuit functions ... 16

8. Product accessories 17

8.1. Accessories standard version ... 17
8.2. Accessories explosion-proof version ... 17
8.3. Cable glands for ATEX/IECEx terminal box ... 18
8.4. Special tool to turn the terminal box ... 18

DTS 1000079488 EN Version: AC Status: RL (released | freigegeben | validé) printed: 28.03.2024

9. Ordering information 19

9.1. Bürkert eShop 19
9.2. Bürkert product filter 19
9.3. Bürkert Product Enquiry Form 19
9.4. Ordering chart 20
Standard version 20
Explosion-proof version 22
9.5. Ordering chart accessories 23
Cable plug Type 2518, form A according to DIN EN 175301 - 803 23
Cable plug Type 2509, form A according to DIN EN 175301 - 803 23
Cable glands for ATEX/IECEx terminal box 23
Mounting plate complete for DIN rail mounting 24
Locking ring 24

DTS 1000079488 EN Version: AC Status: RL (released | freigegeben | validé) printed: 28.03.2024

DTS 1000079488 EN Version: AC Status: RL (released | freigegeben | validé) printed: 28.03.2024

1. General technical data

Product properties	
Dimensions	Further information can be found in chapter "5. Dimensions" on page 9.
Material	
Seal	EPDM FKM FFKM NBR
Body	Brass Stainless steel (1.4401) PP (Polypropylene) PVDF (on request) PEEK
Material resistance	Further information can be found in chapter "4.1. Bürkert resistApp" on page 8.
Weight	
Standard version	Metal body: 0.45 kg Plastic body: 0.30 kg
Explosion-proof version	Metal body: 0.75 kg Plastic body: 0.60 kg
Orifice	DN 2…DN 5
Circuit function	Further information can be found in chapter "2. Circuit functions" on page 5.
Thermal insulation class of solenoid coil	Epoxy coil class H
Performance data	
Duty cycle	
With brass, stainless steel and PEEK	100 %
With PP and PVDF	40 % duty cycle (60 % intermittent operation) in 30 min for 8 W version 100 % duty cycle for 5 W version
Switching frequency (explosion-proof version)	Medium temperature up to +70 °C: max. 20/min Medium temperature up to +90 °C: max. 5/min
Switching time [1,)] standard version	
Frequency AC	Opening: 8…15 ms Closing: 8…15 ms
Frequency DC	Opening: 10…20 ms Closing: 10…20 ms
Switching time [1,)] explosion-proof version	
Orifice DN 2…DN 4	Opening: 30 ms Closing: 40 ms
Electrical data	
Power consumption standard	
Frequency AC	Inrush: 30 VA Hold: 15 VA Hold: 8 W
Frequency DC	Cold: 11 W Warm: 8 W
Power consumption Impulse (inrush winding)	
Frequency AC	Hold: 20 VA Hold: 11 W
Frequency DC	Cold: 11 W Warm: 8 W
Power consumption explosion-proof version	
Frequency AC/DC	Inrush: 40 W Hold: 3 W
Voltage	
Standard version	24 V/50 Hz, 110 V/50 Hz, 230 V/50 Hz, 120 V/60 Hz, 240 V/60 Hz, 12 V/DC, 24 V/DC (further voltages on request)
Explosion-proof version	24 V, 230 V (further voltages on request)
Voltage tolerance	±10 %

Medium data	
Operating medium	
With NBR	Neutral medium such as compressed air, town gas, water, hydraulic oil, oils and greases without additives, oxygen
With EPDM	Alkalis, acids to medium concentrations, alkaline washing and bleaching lyes
With FKM	Oxydizing acids and substances, hot oils with additives, salt solutions, waste gases, oxygen
With FFKM	Aggressive mediums, hot air, hot oils
All Materials	Further information can be found in chapter "4.1. Bürkert resistApp" on page 8
Medium temperature	
With body material brass, stainless steel or PEEK	NBR: 0 °C…+80 °C EPDM: -30 °C…+90 °C FKM: 0 °C…+90 °C FFKM: +5 °C…+90 °C
With body material PP	NBR: 0 °C…+80 °C EPDM: -30 °C…+80 °C FKM: 0 °C…+80 °C FFKM: +5 °C…+80 °C
Viscosity	Max. 37 mm^2/s
Process/Port connection & communication	
Electrical connection	
Standard version	• Plug contacts according to DIN EN 175 301-803 form A for cable plug **Type 2518** ▶ Further information can be found in chapter "Cable plug Type 2518, form A according to DIN EN 175301-803" on page 23. • Plug contacts according to DIN EN 175 301-803 form A for cable plug **Type 2509** ▶ (Also available with moulded cable on request.) Further information can be found in chapter "Cable plug Type 2509, form A according to DIN EN 175301-803" on page 23.
Explosion-proof version	Moulded cable Terminal box without safety fuse (Information about ACP016 see operating manual.)
Port connection	G ¼, NPT ¼, (RC ¼ and G ⅛ on request, G ⅛ not possible for PP and PEEK)
Approvals and conformities	
Degree of protection	
Standard version	IP65 with cable plug
Explosion-proof version	IP65
Explosion protection	Further information can be found in chapter "3.4. Explosion protection" on page 6.
North America (USA/Canada)	Further information can be found in chapter "3.5. North America (USA/Canada)" on page 7.
Drinking water	Further information can be found in chapter "3.6. Drinking water" on page 7.
Others	Further information can be found in chapter "3.7. Others" on page 7.
Environment and installation	
Installation position	As required, preferably with actuator upright
Ambient temperature	
Standard version	Max. +55 °C
Explosion-proof version	Max. +55 °C

1.) Measurement at +20 °C, 6 bar at the valve outlet, opening: pressure build-up 0…90 %, closing: pressure reduction 100…10 %

DTS 1000079488 EN Version: AC Status: RL (released | freigegeben | validé) printed: 28.03.2024

2. Circuit functions

Symbol	Description
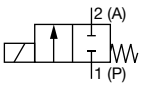	**Circuit function A (CF A)** 2/2-way solenoid valve Direct-acting Normally closed
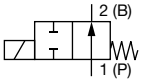	**Circuit function B (CF B)** 2/2-way solenoid valve Direct-acting Normally open

Symbol	Description
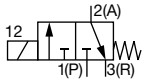	**Circuit function C (CF C)** 3/2-way solenoid valve Direct-acting Normally closed
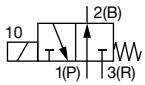	**Circuit function D (CF D)** 3/2-way solenoid valve Direct-acting Normally open
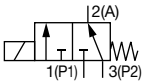	**Circuit function E (CF E)** 3/2-way mixing valve (solenoid valve)
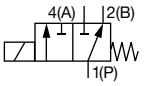	**Circuit function F (CF F)** 3/2-way distribution valve (solenoid valve) Direct-acting
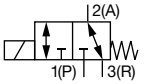	**Circuit function T (CF T)** 3/2-way solenoid valve Direct-acting Flow direction optional Normally closed

3. Approvals and conformities

3.1. General notes

- The approvals and conformities listed below must be stated when making enquiries. This is the only way to ensure that the product complies with all required specifications.
- Not all available versions can be supplied with the below mentioned approvals or conformities.

3.2. Conformity

In accordance with the Declaration of Conformity, the product is compliant with the EU Directives.

3.3. Standards

The applied standards which are used to demonstrate compliance with the EU Directives are listed in the EU-Type Examination Certificate and/or the EU Declaration of Conformity.

3.4. Explosion protection

<table>
<tr><th>Approval</th><th>Description</th></tr>
<tr><td>
 </td><td>Optional: Explosion protection according to category 2 (zone 1/21)

Ex marking of the components according to the following table:

<table>
<tr><th colspan="2">Coil Type ACP016</th></tr>
<tr><th>Coils with cable outlet</th><th>Coils with terminal box</th></tr>
<tr><td>ATEX:
EPS 16 ATEX 1 111 X
II 2 G Ex mb IIC T4 Gb
II 2 D Ex mb IIIC T130 °C Db

IECEx:
IECEx EPS 16.0049X
Ex mb IIC T4 Gb
Ex mb IIIC T130 °C Db</td><td>ATEX:
PTB 15 ATEX 1011 U
II 2G Ex eb mb IIC T4 Gb
II 2D EX mb tb IIIC T130 °C

IECEx:
IECEx PTB 15.0037 U
II eb mb IIC T4 Gb
II mb tb IIIC T130 °C Db</td></tr>
</table>
</td></tr>
</table>

DTS 1000079488 EN Version: AC Status: RL (released | freigegeben | validé) printed: 28.03.2024

3.5. North America (USA/Canada)

Approval	Description
	Optional (valid for valves): UL Listed for the USA The valves are UL Listed for the USA according to: • UL 429 (electrically operated valves) and UL 429A (Electrically Operated Valves for Fire Protection Service)
SOLENOID FOR USE IN HAZARDOUS LOCATIONS E504714	**Optional (valid for coils): UL Hazardous Locations – Explosion Protection** UL Listed for Hazardous Locations for USA and Canada Class I, Zone 1 Class I, Division 2, Group A, B, C and D Class II + III, Division 2, Group F and G
	Optional (valid for valves): UL Recognized for the USA The valves are UL Recognized for the USA according to: • UL 429 (electrically operated valves) and UL 429A (Electrically Operated Valves for Fire Protection Service)
	Optional (valid for valves): CSA for Canada The valves are CSA approved for Canada according to: • CSA 139 (electrically operated valves)
	Optional (valid for coils): FM (Factory Mutual) – Explosion Protection FM for Hazardous Locations for USA and Canada Class I, Zone 1 Class I, Division 1, Groups A, B, C and D Class II + III, Division 1, Groups E, F and G

3.6. Drinking water

Conformity	Description
	Suitable for use in drinking water applications The materials comply with the assessment principles (UBA) for materials in contact with drinking water (TrinkwasserV). PF39: Suitable for products with a maximum temperature of 85 °C (hot water) PF36: Suitable for products with a maximum temperature of 60 °C (warm water) PF40: Suitable for products with a maximum temperature of 23 °C (cold water)

3.7. Others

DNV GL classification

Approval	Description
	DNV GL classification – Ships, offshore units, and high speed and light craft The products are accepted for installation on all vessels classed by DNV GL.

DTS 1000079488 EN Version: AC Status: RL (released | freigegeben | validé) printed: 28.03.2024

4. Materials

4.1. Bürkert resistApp

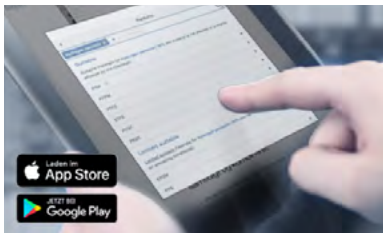

Bürkert resistApp – Chemical resistance chart

You want to ensure the reliability and durability of the materials in your individual application case? Verify your combination of media and materials on our website or in our resistApp.

Start chemical resistance check

4.2. Material specifications

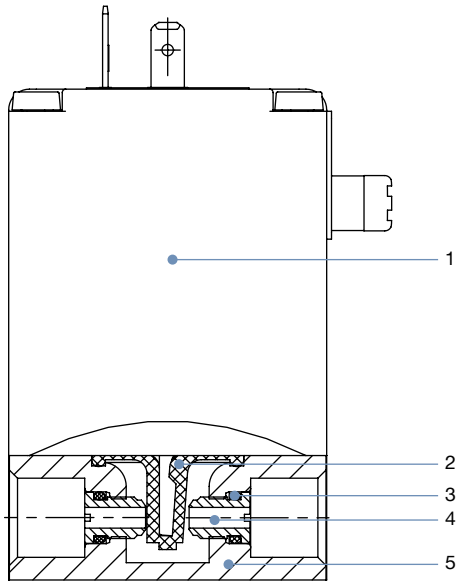

No.	Element	Material
1	Coil	Epoxy
2	Diaphragm	EPDM, FKM, FFKM, NBR
3	O-ring	EPDM, FKM, FFKM, NBR
4	Seat	Brass Stainless steel (1.4401) PP (Polypropylene) PEEK
5	Valve body	Brass Stainless steel (1.4401) PP (Polypropylene) PEEK

DTS 1000079488 EN Version: AC Status: RL (released | freigegeben | validé) printed: 28.03.2024

5. Dimensions

5.1. Standard version

General notes:

- The dimensions D1 and L1 apply to G-threads.
- The dimensions D2 and L2 apply to NPT-threads.
- The device can be attached via the existing holes on the bottom side. The hole pattern is 38x24. For metal bodies, use M4 screws. For plastic bodies, use either self-tapping screws or a body with metric thread inserts (variable codes ACxx or ADxx). The screw-in depth must be observed. Refer to **operating instructions Type 0330** ▶ for more information.
- The dimensions of the cable plug Type 2518 can be found in chapter "Cable plug Type 2518, form A according to DIN EN 175301-803" on page 23.
- The dimensions of the cable plug Type 2509 can be found in chapter "Cable plug Type 2509, form A according to DIN EN 175301-803" on page 23.

Metal body

Note:

- Dimensions in mm
- For metal bodies, the minimum thread length at the middle connection is 7.5 mm.
- Screw-in depth of G ¼ connection threads: When using pipe fittings, select versions with G ⅛, as the screw-in depth with G ¼ is not sufficient.
- See the general notes at the beginning of chapter "5.1. Standard version" on page 9.

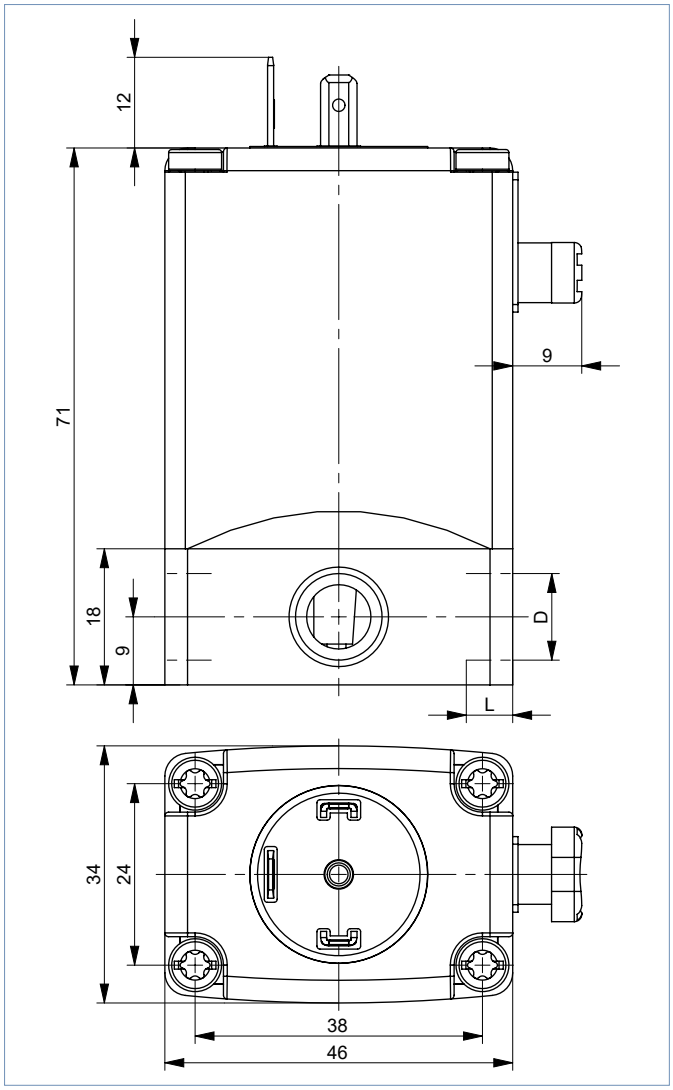

D1	L1	D2	L2
G ⅛	9	–	–
G ¼	9	NPT ¼	7.5

DTS 1000079488 EN Version: AC Status: RL (released | freigegeben | validé) printed: 28.03.2024

DTS 1000079488 EN Version: AC Status: RL (released | freigegeben | validé) printed: 28.03.2024

Plastic body

Note:

- Dimensions in mm
- See the general notes at the beginning of chapter "5.1. Standard version" on page 9.

PP (Polypropylene)

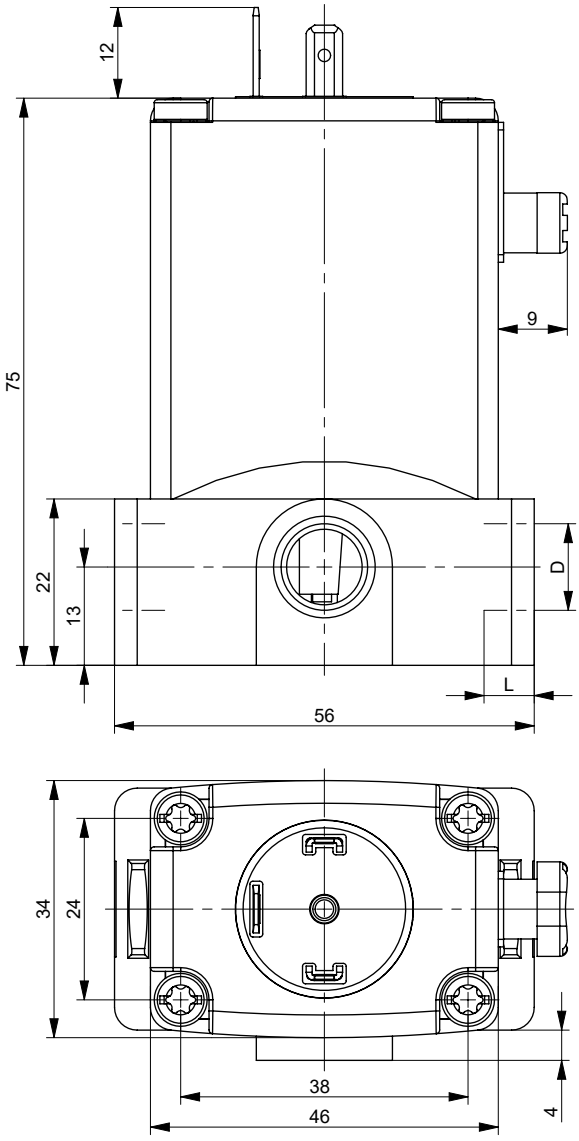

PEEK

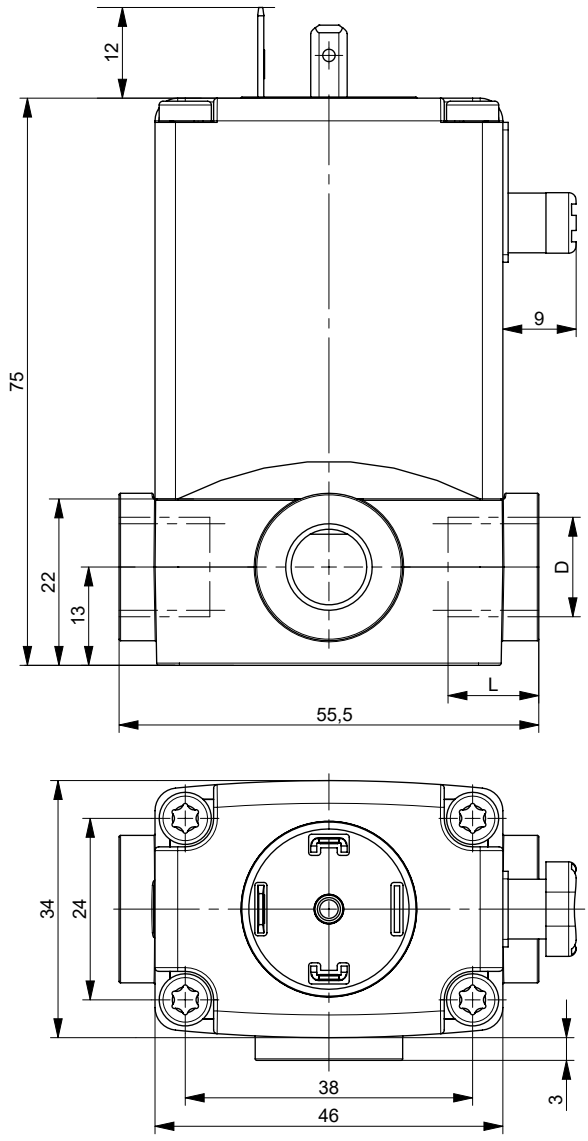

D	L
G ¼	12
NPT ¼	11

Cable version

Note:

- Dimensions in mm
- See the general notes at the beginning of chapter “5.1. Standard version” on page 9.

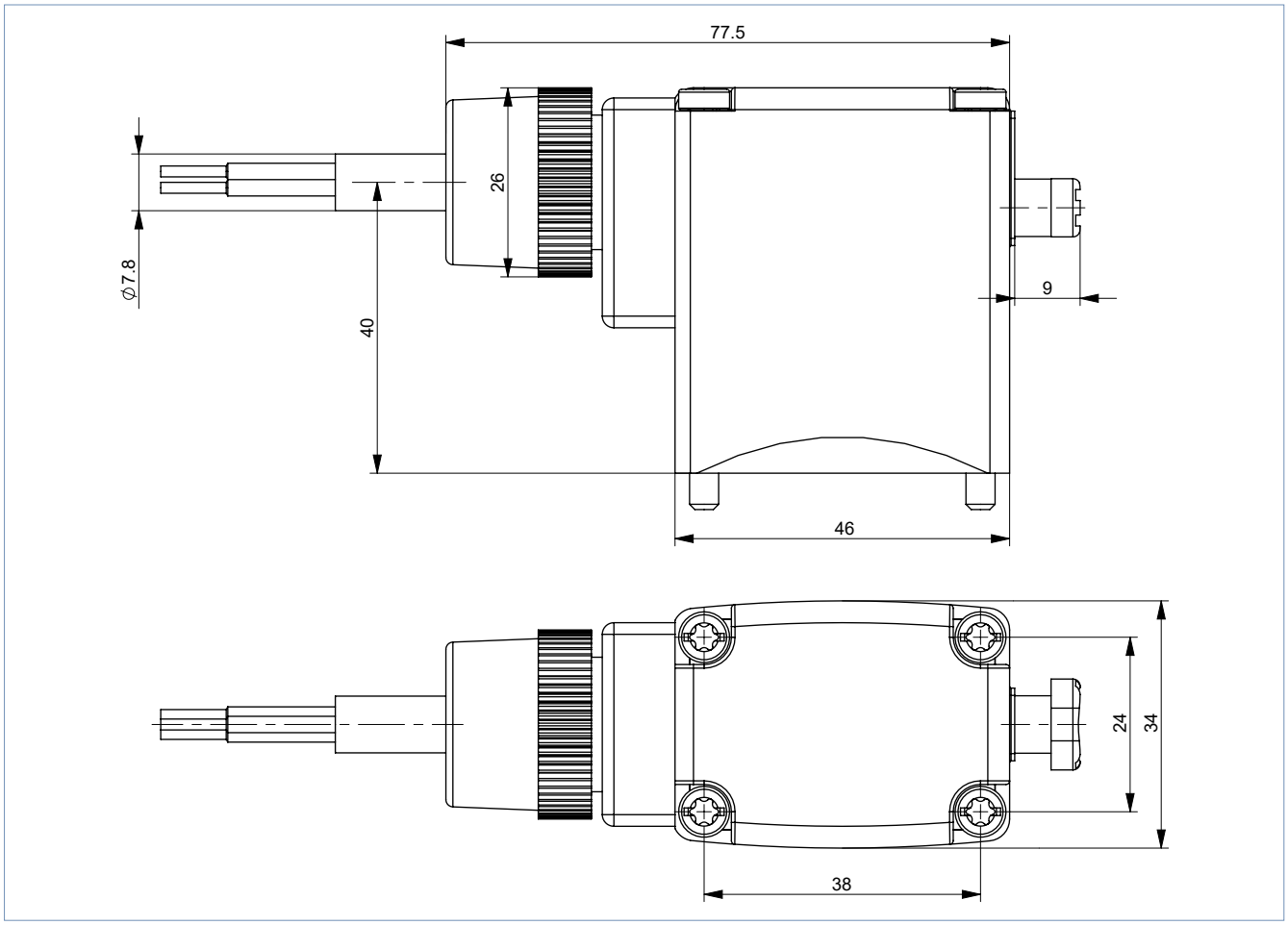

DTS 1000079488 EN Version: AC Status: RL (released | freigegeben | validé) printed: 28.03.2024

5.2. Explosion-proof version

Terminal box version

Note:

- Dimensions in mm
- The dimensions D1 and L1 apply to G-threads.
- The dimensions D2 and L2 apply to NPT-threads.

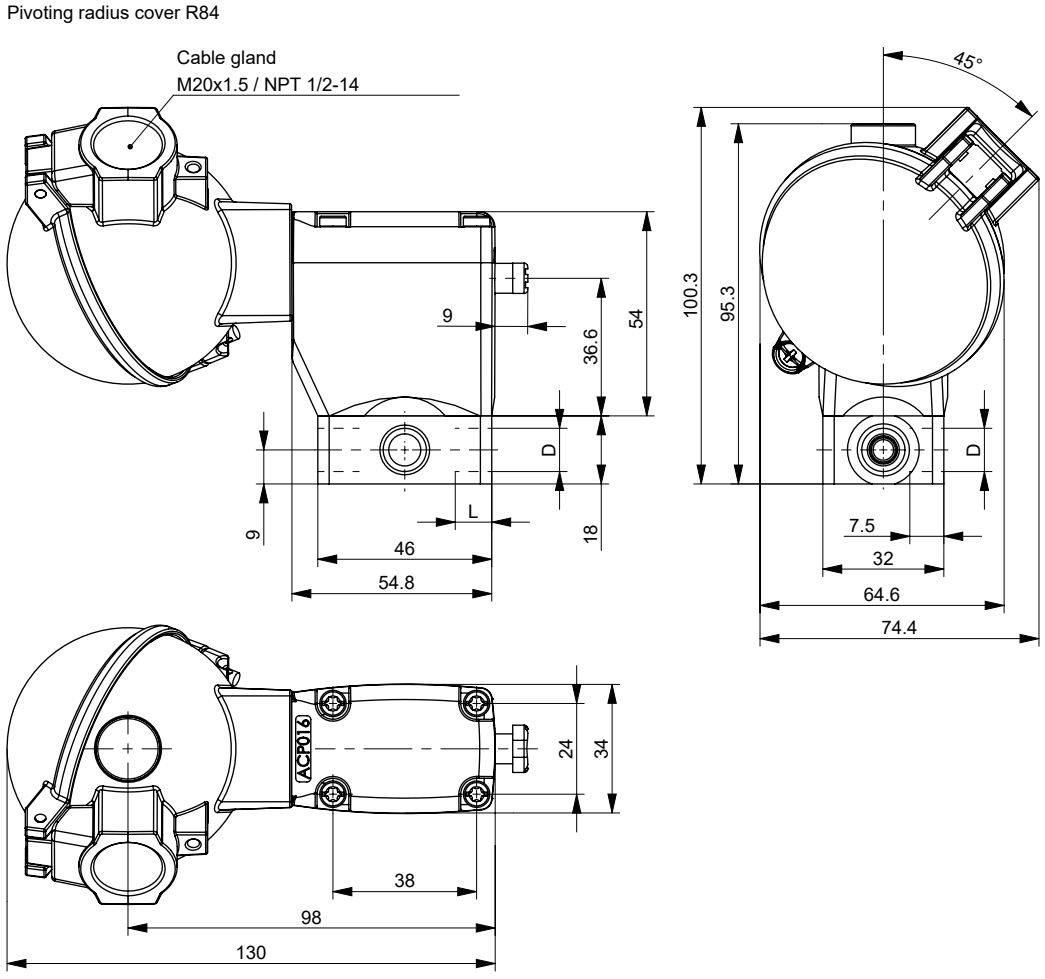

D1	L1	D2	L2
G ⅛	9	–	–
G ¼	9	NPT ¼	7.5

DTS 1000079488 EN Version: AC Status: RL (released | freigegeben | validé) printed: 28.03.2024

Cable version

Note:
Dimensions in mm

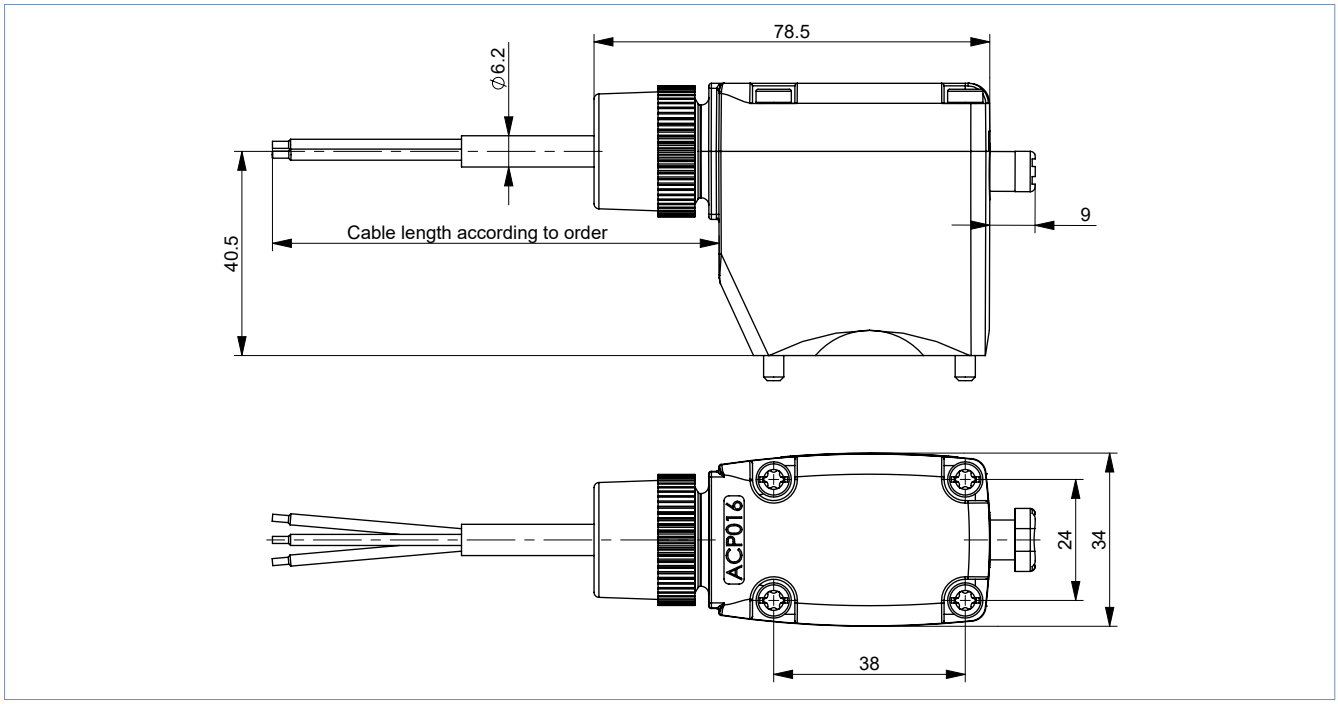

DTS 1000079488 EN Version: AC Status: RL (released | freigegeben | validé) printed: 28.03.2024

6. Device/Process connections

6.1. Pin assignment standard version

Note:
The pin assignment (marked No. 1, 2 and 3 in the drawing) depends on the circuit function. In the table, compare the respective pin assignment with the corresponding circuit function.

Circuit function	Connection 1	Connection 2	Connection 3	2-way	3-way
A	P	A	–	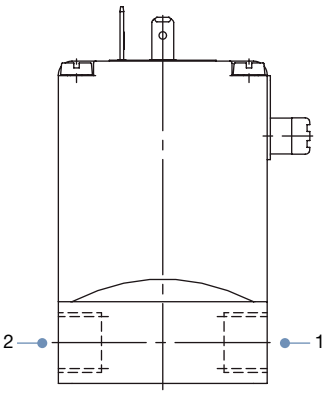	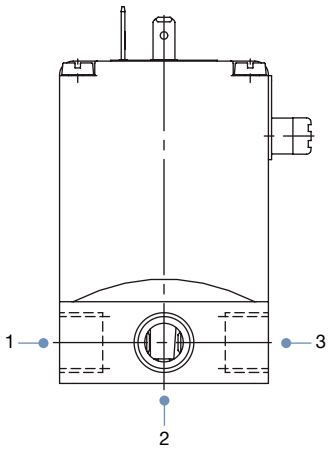
B	B	P	–		
C	P	A	R		
D	R	B	P		
E	P1	A	P2		
F	A	P	B		
T	NC	I_N/OUT	NO		

6.2. Pin assignment explosion-proof version

Note:
The pin assignment (marked No. 1, 2 and 3 in the drawing) depends on the circuit function. In the table, compare the respective pin assignment with the corresponding circuit function.

Circuit function	Connection 1	Connection 2	Connection 3	2-way	3-way
A	P	A	–	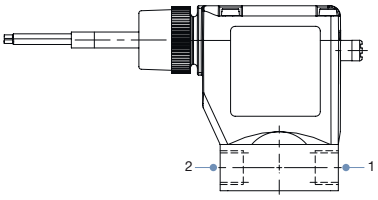	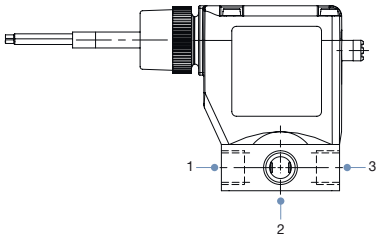
B	B	P	–		
C	P	A	R		
D	R	B	P		
E	P1	A	P2		
F	A	P	B		
T	NC	I_N/OUT	NO		

DTS 1000079488 EN Version: AC Status: RL (released | freigegeben | validé) printed: 28.03.2024

7. Performance specifications

7.1. Pressure range and flow rate

Standard version

Note:
Refer to "Use in other circuit functions" on page 16 for more information about use in other circuit function.

Circuit function	DN	K_V value water [1.]		Pressure range [2.]		
		DC	AC (50 or 60 Hz)	Standard [3.]	Vacuum [4.]	Impulse [5.]
		[m³/h]	[m³/h]	[bar]	[bar]	[bar]
Metal body						
A / B / C / D / F	2	0.08	0.11	0…16 [6.]	-0.98…10	0…16 [6.]
	3	0.14	0.18	0…10	-0.98…6	0…10
	4	0.17	0.23	0…5	-0.98…3	0…5
	5	0.29	0.29	0…2.5	-0.98…1	0…2.5
E	2	0.08	0.11	0…10	-0.98…8	0…10
	3	0.14	0.18	0…6	-0.98…5	0…6
	4	0.17	0.23	0…3	-0.98…2.5	0…3
	5	0.29	0.29	0…1.5	-0.98…1	0…1
T	2	0.08	0.11	0…12	-0.98…8	0…10
	3	0.14	0.18	0…8	-0.98…5	0…6
	4	0.17	0.23	0…4	-0.98…2.5	0…5
	5	0.29	0.29	0…2.5	-0.98…1	–

Circuit function	DN	K_V value water [7.]	Pressure range [2.]			
			Standard [3.] AC [50 or 60 Hz]	Standard [3.] DC	Vacuum [4.]	Impulse [5.]
		[m³/h]	[bar]	[bar]	[bar]	[bar]
Plastic body						
A / B / C / D / F	2	0.13	0…16 [6.][8.]	0…12 [8.]	-0.98…10	0…12 [8.]
	3	0.25	0…10	0…8	-0.98…6	0…8
	4	0.30	0…5	0…4	-0.98…3	0…4
	5	0.40	0…4.5	0…3	-0.98…1	0…3
E / T	2	0.13	0…10	0…7	-0.98…7	0…7
	3	0.25	0…6	0…4	-0.98…5	0…4
	4	0.30	0…3	0…2	-0.98…2.5	0…2
	5	0.40	0…2	0…1	-0.98…0.5	0…1

1.) For frequency 56, the K_V values of the DC version apply
2.) Pressure data: overpressure to atmospheric pressure (deviating pressure range for 5 W version)
3.) Heat output 8 W
4.) Vacuum possible for all seal materials
5.) Starting power 11 W
6.) The maximum medium pressure is 12 bar for seal material FKM and FFKM.
7.) The K_V value at DC frequency is reduced by up to 10 % to guarantee the function.
8.) The maximum operating pressure is 10 bar for industry material PVDF.

DTS 1000079488 EN Version: AC Status: RL (released | freigegeben | validé) printed: 28.03.2024

DTS 1000079488 EN Version: AC Status: RL (released | freigegeben | validé) printed: 28.03.2024

Explosion-proof version

Note:
Refer to "Use in other circuit functions" on page 16 for more information about use in other circuit function.

Circuit function	DN	K_V value water	Pressure range [1.)2.)]	
			Standard	Vacuum
		[m³/h]	[bar]	[bar]
Metal body				
A / B / C / D / F	2.0	0.11	0…16	-0.98…10
	3.0	0.18	0…10	-0.98…6
	4.0	0.23	0…5	-0.98…3
	5.0	0.29	0…4	-0.98…2.5
E	2.0	0.11	0…10	-0.98…8
	3.0	0.18	0…6	-0.98…5
	4.0	0.23	0…3.5	-0.98…2.5
	5.0	0.29	0…3	-0.98…2
T	2.0	0.11	0…10	-0.98…8
	3.0	0.18	0…6	-0.98…5

1.) Devices with FKM and/or FFKM diaphragms are reduced to a maximum pressure of 12 bar.
2.) Pressure data: overpressure to atmospheric pressure

Circuit function	DN	K_V value water	Pressure range [1.)2.)]	
			Standard	Vacuum
		[m³/h]	[bar]	[bar]
Plastic body				
A / B / C / D / F	2.0	0.13	0…16 [3.)]	-0.98…10
	3.0	0.25	0…10	-0.98…6
	4.0	0.30	0…5	-0.98…3
	5.0	0.40	0…4.5	-0.98…1
E / T	2.0	0.13	0…10	-0.98…7
	3.0	0.25	0…6	-0.98…5
	4.0	0.30	0…3	-0.98…2.5

1.) Devices with FKM and/or FFKM diaphragms are reduced to a maximum pressure of 12 bar.
2.) Pressure data: overpressure to atmospheric pressure
3.) The maximum operating pressure is 10 bar for industry material PVDF.

Use in other circuit functions

The compression springs installed in the valves differ depending on the circuit function. When used in other circuit functions, the permissible operating pressure changes according to the following table.

Note:
The following table applies to both the standard version and the explosion-proof version.

Circuit function	Max. operating pressure [bar] when using the valve in a new circuit function																	
	Orifice DN 2						Orifice DN 3						Orifice DN 4					
	A [1.)]	B [1.)]	C	D	E	F	A	B	C	D	E	F	A	B	C	D	E	F
Metal body (8 W respectively 11 W)																		
C	16	1.5	16	1.5	1.5	16	10	1	10	1	1	10	5	0.8	5	0.8	0.8	5
D	4	16	4.5	16	4	4	2.5	10	2.5	10	2	3	2	5	2	5	2	2
T	8	8	10	10	10	8	6	6	6	6	6	6	3	3	3	3	3	3
Plastic body (8 W respectively 11 W)																		
C	16	1.5	16	1.5	1.5	16	10	1	10	1	1	10	5	0.8	5	0.8	0.8	5
D	4	16	4.5	16	4	4	2.5	10	2.5	10	2	3	2	5	2	5	2	2
F	16	1.5	10	1.5	1.5	16	6	1	6	1	1	10	4	1	4	1	1	5

1.) For circuit function A and B the valve must be connected according to the pin assignment of 3/2-way valve.

8. Product accessories

8.1. Accessories standard version

Option	Variable Code	Description
Impulse version	CF02	Bistable magnetic system with inrush and drop-off coil; continuous operation or operation with short current pulses (min. 150 ms) possible
Oxygen versions	NL02	Suitable for applications with oxygen (non-metal materials that are in contact with the medium, are tested and approved according to BAM)
Increased purity requirements, e.g. oil, grease and silicone-free	NL50/ NL05	Wetted parts are specially cleaned and packaged in accordance with the valves
Increased tightness requirements	PCxx	Standard units are tested at 10^{-2} mbar x l/sec; feasible up to 10^{-6} mbar
Electrical feedback	LF02/ LF03	See **Type 1060** ▶. Function as opener, closer or toggle switch depending on the connection (no IP65 achievable)
High-power electronics	CZ05	Inrush power 60 W, nominal holding current 3 W; with plastic versions 100 % duty cycle is now feasible
Vacuum version	NA02	Suitable for vacuums up to -0.98 bar
Increased purity and tightness requirements	NA03	Wetted parts are specially cleaned and leak tested to 10^{-4} mbar x l/sec
Increased purity and tightness requirements and vacuum version	NA01	Wetted parts are specially cleaned and leak tested up to 10^{-4} mbar x l/sec and suited for vacuum up to -0.98 bar
Coil with reduced power (5 W)	–	Devices have lower pressure range; with plastic versions 100 % duty cycle is now feasible
Cable plug	JHxx/ JGxx/ JFxx	Cable plug is part of the delivery. Cable plug versions (according to DIN EN 175301-803 form A), see data sheet **Type 2518** ▶ and **Type 2509** ▶
Approvals	PD01	CSA General Purpose valve
	PD02	UR (UL Recognized)/CSA approval
	PD07	DNV-GL (formerly Germanischer Lloyd)
	PR05	cFMus approved coil Class I, Division 1, Groups A, B, C and D - T4 Class II, Division 1, Groups E, F and G - T4 Class III, Division 1 - T4 Class I, Zone 1, AEx mb IIC T4 Gb, Zone 21 AEx mb IIIC T130 °C Db Ex mb IIC T4 Gb; Ex mb IIIC T130 °C Db
	PE95	UL (UL Listed) approval
	PU15	UL Listed for Hazardous Locations for USA and Canada, Class I, Zone 1, AEx eb mb IIC T4; Zone 21, AEx mb tb IIIC T130 °C / Class I, Div 2, Group A,B,C,D; Class II+III, Div 2, Group F,G
	PX41	EPS 16 ATEX 1111 X/IECEx EPS 16.0049X, 2G T4 IIC/2D T130 °C IIIC, Tamb -40 °C…+60 °C, single and block mounting
Possible conformities (depending on the assembly)	–	EAC, drinking water, FDA

8.2. Accessories explosion-proof version

Option	Variable Code	Description
Oxygen versions	NL02	Suitable for applications with oxygen (non-metal materials that are in contact with the medium, are tested and approved according to BAM)
Increased purity requirements e.g. oil, grease and silicone-free	NL50/ NL05	Wetted parts are specially cleaned and packaged in accordance with the valves
Increased hermetic requirements	PCxx	Standard units are tested at 10^{-2} mbar x l / sec; feasible up to 10^{-6} mbar
Vacuum version	NA02	Suitable for vacuums up to -0.98 bar
Increased purity and hermetic requirements	NA03	Wetted parts are specially cleaned and leak tested to 10^{-4} mbar x l/sec
Increased purity and hermetic requirements and vacuum version	NA01	Wetted parts are specially cleaned and leak tested up to 10^{-4} mbar x l/sec and suited for vacuum up to -0.98 bar
Electrical feedback	CF15	Coil with intrinsically safe proximity switches (PTB 00 ATEX 2048X) instead of manual override

DTS 1000079488 EN Version: AC Status: RL (released | freigegeben | validé) printed: 28.03.2024

8.3. Cable glands for ATEX/IECEx terminal box

Note:
A polyamide cable gland is included in the scope of delivery. A nickel-plated brass version can be ordered for a surcharge, see **"Cable glands for ATEX/IECEx terminal box" on page 23**.

Description	Ex approvals		Dimensions	
	Certification	Identification		
Ex cable gland, Nickel-plated brass, 6…13 mm 	PTB 04 ATEX 1112 X, IECEx PTB 13.0027X	II 2 G Ex e IIC Gb, II 2 D Ex tb IIIC Db IP68	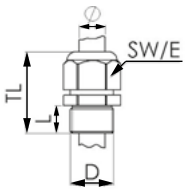	TL 29…37 mm L 6 mm D 20 mm SW 24 mm E 27 mm
Ex cable gland, Polyamide, 7…13 mm 	PTB 13 ATEX 1015 X, IECEx PTB 13.0034X	II 2 G Ex e IIC Gb, II 2 D Ex tb IIIC Db IP68	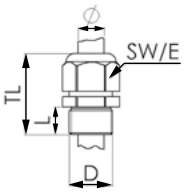	TL 36…45 mm L 10 mm D 20 mm SW 24 mm E 28 mm

8.4. Special tool to turn the terminal box

Note:
This special tool is not included in the scope of delivery of the valve, see **"Cable glands for ATEX/IECEx terminal box" on page 23**.

Description	Components of the set
Set SC02-AC10 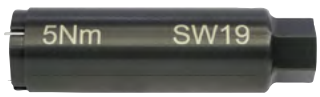	• Special wrench • Service manual

DTS 1000079488 EN Version: AC Status: RL (released | freigegeben | validé) printed: 28.03.2024

9. Ordering information

9.1. Bürkert eShop

Bürkert eShop – Easy ordering and quick delivery

You want to find your desired Bürkert product or spare part quickly and order directly? Our online shop is available for you 24/7. Sign up and enjoy all the benefits.

Order online now

9.2. Bürkert product filter

Bürkert product filter – Get quickly to the right product

You want to select products comfortably based on your technical requirements?
Use the Bürkert product filter and find suitable articles for your application quickly and easily.

Try out our product filter

9.3. Bürkert Product Enquiry Form

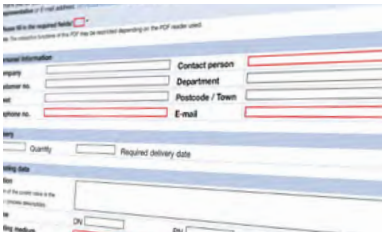

Bürkert Product Enquiry Form – Your enquiry quickly and compactly

Would you like to make a specific product enquiry based on your technical requirements? Use our Product Enquiry Form for this purpose. There you will find all the relevant information for your Bürkert contact. This will enable us to provide you with the best possible advice.

Fill out the form now

DTS 1000079488 EN Version: AC Status: RL (released | freigegeben | validé) printed: 28.03.2024

9.4. Ordering chart

Standard version

Note:

- All devices with connection thread G ¼, manual override and cable plug **Type 2518** ▶.
- Other versions are available on request.
- Articles with reduced delivery time

Circuit function	Orifice	Body or seat material	Seal material	Article no.		
				024/DC	024/50	230/50
	[mm]			[V/Hz]	[V/Hz]	[V/Hz]
CF A [1,)] 2/2-way solenoid valve Direct-acting Normally closed 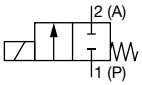	2.0	PEEK	FKM	o. r.	o. r.	o. r.
			EPDM	o. r.	o. r.	o. r.
			FFKM	o. r.	o. r.	o. r.
	3.0	Brass	FKM	020293	022883	124909
			NBR	020294	086553	024902
		Stainless steel	FKM	020292	023984	024563
		PP	FKM	018410	088496	045653
			EPDM	067214	022105	062398
		PEEK	FKM	o. r.	o. r.	o. r.
			EPDM	o. r.	o. r.	o. r.
			FFKM	o. r.	o. r.	o. r.
	4.0	Brass	FKM	024019	025246	124912
			NBR	025084	–	046007
		Stainless steel	FKM	018276	018857	020873
		PP	FKM	062695	043005	063116
			EPDM	021660	067731	063118
		PEEK	FKM	o. r.	o. r.	o. r.
			EPDM	o. r.	o. r.	o. r.
			FFKM	o. r.	o. r.	o. r.
	5.0	PP	FKM	062624	067007	022619
			EPDM	061321	054261	049969
CF B [1,)] 2/2-way solenoid valve Direct-acting Normally open 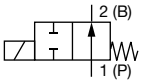	3.0	Brass	FKM	141917	130146	141919
		Stainless steel	FKM	141928	141929	141931
	4.0	Brass	FKM	141920	141921	141923
		Stainless steel	FKM	141932	141933	141935
CF C 3/2-way solenoid valve Direct-acting Normally closed 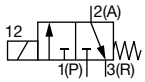	2.0	Brass	NBR	041103	042129	041105
		PEEK	FKM	o. r.	o. r.	o. r.
			EPDM	o. r.	o. r.	o. r.
			FFKM	o. r.	o. r.	o. r.
	3.0	Brass	NBR	041107	041108	041116
		Stainless steel	FKM	052344	045024	052059
		PEEK	FKM	o. r.	o. r.	o. r.
			EPDM	o. r.	o. r.	o. r.
			FFKM	o. r.	o. r.	o. r.
	4.0	Brass	NBR	042218	042695	042329
		Stainless steel	FKM	050483	043324	050979
		PP	FKM	–	088420	–
			EPDM	–	–	063625
		PEEK	FKM	o. r.	o. r.	o. r.
			EPDM	o. r.	o. r.	o. r.
			FFKM	o. r.	o. r.	o. r.

DTS 1000079488 EN Version: AC Status: RL (released | freigegeben | validé) printed: 28.03.2024

Circuit function	Orifice	Body or seat material	Seal material	Article no.		
				024/DC	024/50	230/50
	[mm]			[V/Hz]	[V/Hz]	[V/Hz]
CF D 3/2-way solenoid valve Direct-acting Normally open 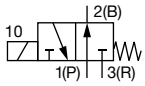	2.0	Brass	NBR	056984	041858	041137
	3.0	Brass	NBR	041139	041141	041147
	4.0	Brass	NBR	043129	042696	042903
CF E 3/2-way mixing valve (solenoid valve) 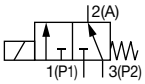	3.0	PP	FKM	069917	066230	022294
			EPDM	078556	–	078559
	4.0	PP	FKM	061077	086921	053406
			EPDM	067160	044693	066033
CF F 3/2-way distribution valve (solenoid valve) Direct-acting 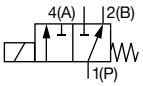	4.0	PP	FKM	020528	–	–
			EPDM	–	–	066032
CF T 3/2-way solenoid valve Direct-acting Flow direction optional Normally closed 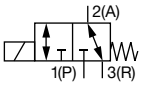	2.0	Brass	FKM	124922	138316	124925
		Stainless steel	FKM	124932	124933	124935
		PEEK	FKM	o. r.	o. r.	o. r.
			EPDM	o. r.	o. r.	o. r.
			FFKM	o. r.	o. r.	o. r.
	3.0	Brass	FKM	124927	124928	124930
		Stainless steel	FKM	124937	124938	124940
		PEEK	FKM	o. r.	o. r.	o. r.
			EPDM	o. r.	o. r.	o. r.
			FFKM	o. r.	o. r.	o. r.

o. r. = on request
– = not available
1.) The listed article numbers and circuit functions have a body with straight pass.

DTS 1000079488 EN Version: AC Status: RL (released | freigegeben | validé) printed: 28.03.2024

Explosion-proof version

Note:

- All devices with connection thread G ¼ and manual override.
- Other versions are available on request.

Circuit function	Orifice	Body or seat material	Seal material	Electrical connection	Article no.	
					024/AC/DC	230/AC/DC
	[mm]				[V/Hz]	[V/Hz]
CF A [1.)] 2/2-way solenoid valve Direct-acting Normally closed 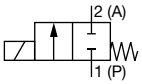	3.0	Brass	NBR	Terminal box	353707	353708
				Cable	353616	353617
		Stainless steel	FKM	Terminal box	353709	353710
				Cable	353618	353619
CF C 3/2-way solenoid valve Direct-acting Normally closed 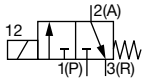	3.0	Brass	NBR	Terminal box	353594	353695
				Cable	353596	353599
		Stainless steel	FKM	Terminal box	353700	353706
				Cable	353614	353615
CF E 3/2-way mixing valve (solenoid valve) 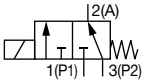	3.0	Stainless steel	FKM	Terminal box	353712	353702
				Cable	353620	353621
CF F 3/2-way distribution valve (solenoid valve) Direct-acting 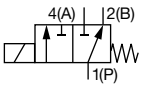	3.0	Stainless steel	FKM	Terminal box	394337	353713
				Cable	353622	353623
	4.0	Stainless steel	FKM	Terminal box	353697	–
				Cable	353646	–

– = not available

1.) The listed article numbers and circuit functions have a body with straight pass.

DTS 1000079488 EN Version: AC Status: RL (released | freigegeben | validé) printed: 28.03.2024

9.5. Ordering chart accessories

Cable plug Type 2518, form A according to DIN EN 175301-803

Note:

- Dimensions in mm
- For further versions see data sheet **Type 2518** ▶.

Cable plug	Dimensions	Version	Voltage	Article no.
	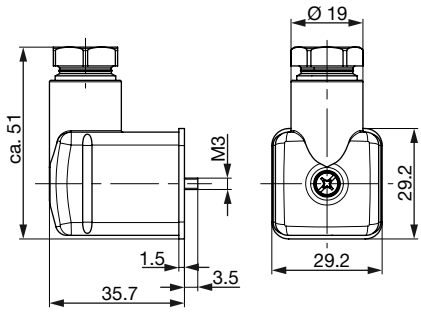	Without circuitry (AC/DC)	0…250 V AC/DC	314802
		With LED (AC/DC)	12…24 V AC/DC	314812
		With LED and varistor (AC/DC)	12…24 V AC/DC	314820
		With rectifier, LED and varistor	12…24 V AC/DC	314816

Cable plug Type 2509, form A according to DIN EN 175301-803

Note:

- Dimensions in mm
- Without circuitry (standard)
- Refer to data sheet **Type 2509** ▶ for more information about the cable plug.

Cable plug	Dimensions	Version	Voltage	Article no.
	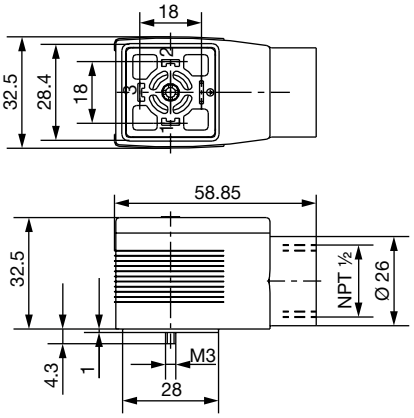	Without circuitry	0…250 V AC/DC	137943

Cable glands for ATEX/IECEx terminal box

Note:

- A cable gland in polyamide version is included in the delivery. A nickel-plated brass version can be ordered at surcharge.
- Refer to **"8.3. Cable glands for ATEX/IECEx terminal box" on page 18** for more information about Ex cable glands.
- Refer to **"8.4. Special tool to turn the terminal box" on page 18** for more information about special wrench.

Description	Article no.
Ex cable gland, nickel-plated brass, 6…13 mm [1.)]	773278
Ex cable gland, polyamide, 7…13 mm [1.)]	773277
Set SC02-AC10: special wrench [2.)] incl. service manual	293488

1.) Cable diameter
2.) Not included in the scope of delivery of the valve

DTS 1000079488 EN Version: AC Status: RL (released | freigegeben | validé) printed: 28.03.2024

Mounting plate complete for DIN rail mounting

Description	Article no.
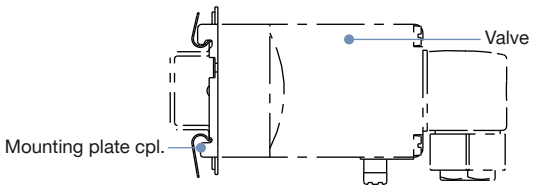	013253

Locking ring

Description	Article no.
Locking ring to prevent inadvertent manual actuation 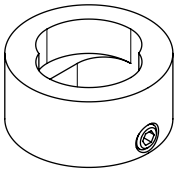	013372

DTS 1000079488 EN Version: AC Status: RL (released | freigegeben | validé) printed: 28.03.2024